LEAD TECH

LT900 Series

Continuous Inkjet Printer

Designed for harsh environments & 24/7 operations

[EMC Compatibility]

[Superior Print Quality]

[Self-Calibration Technology]

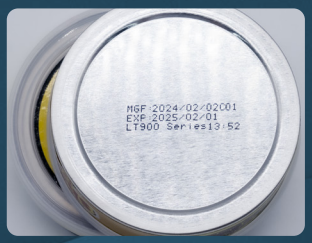

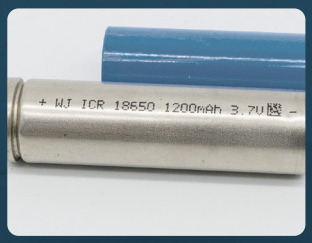

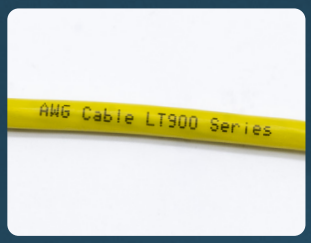

Coding Tomorrow

www.leadtech.ltd

LEAD TECH (ZHUHAI) ELECTRONIC CO., LTD.

Specifications

Model	LT900	LT910	LT980 HRS
Material	Precision coating	Stainless steel	Precision coating/Stainless steel
Printing Performance	1-4 Lines(7X5matrix) 1-5 Lines(5X5 matrix) Max.speed=344m/min@5X5		1-4 Lines(7X5matrix) 1-5 Lines(5X5 matrix) Max.speed=430m/min@5X5
Font Matrix	Single-Line: 5X5, 7X5, 9x6, 12X8, 16X11, 19X14, 24X17, 32X22 Twin-Line: 5X5, 7X5, 9x6, 12X8, 16X11	3 Lines: 5x5, 7x5, 9x6 4 Lines: 5x5, 7x5	5 Lines: 5x5
Printing Distance	Character height: 1-15mm Printing distance: 2mm to 30mm Best: 10mm		
Operating System	LT-Touch unique System, Multiple Languages		
Print Content	English, Chinese, Arabic Numbers, serial number, Barcode, Shift, DM/QR Code, UPC A & E, EAN 8 & 13, Code 128 A, B & C, Code 125, GS1, UCC/EAN 128, Code 39, logo, automatic date/time/expiry date, logo, special characters, etc.		
Extra Memory	USB, RS485, Ethernet		
System Language	Chinese, English, Korean, Russian, Polish, Persian, Arabic, Spanish, German, Indonesian, Vietnamese, Croatian, Thai, Slovenian, Slovak, Bosnian, Portuguese, Italian, etc. customizable language		
Memory Storage	1000+Messages		
Industrial Protection	IP55, IP65 (Option)	IP55, IP54 or IP65 (Option)	IP55, IP54 or IP65 (Option)
Printhead	Super soft, length 3m Constant temperature, 60μm		Super soft, length 3m Constant temperature, 50μm
Printing Direction	360°All-round printing		
Cartridge Volume	Ink (500ml) Make-up (750ml)		
Temperature/ Humidity range	0-45°C 0-95% Relative Humidity, Non-condensing		
Power	AC100-240V, 50/60Hz, 100VA		

*LT900 is standard model, LT980 HRS is a high-speed, high-resolution,small font model (suitable for applications with high-precision fonts)

Dimensions

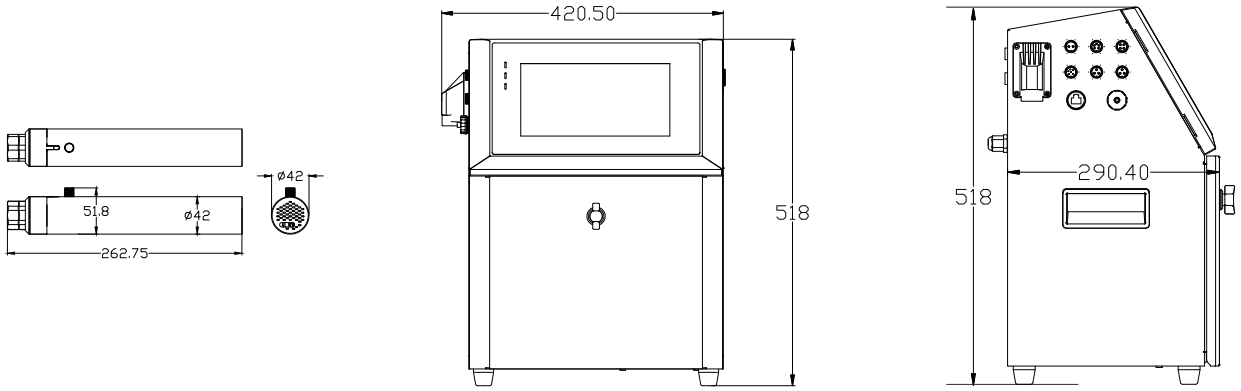

LEAD TECH (ZHUHAI) ELECTRONIC CO., LTD.

ULTIMATE SOLUTIONS

Ultimate Solutions Ltd
Unit A5 Brooklands Technology Park,
Brooklands Gate, Sywell Aerodrome,
Wellingborough Road, Sywell,
Northampton, NN6 0GY
United Kingdom

Email
support@ultimatesolutionsltd.zohodesk.eu
Telephone
+44 (0) 7932 976505
Website
ultimatesolutionsltd.co.uk

Company No. 7724173
VAT No. GB 126 9331 13